DocuSign Envelope ID: 63B99F10-5B56-439E-BCE5-B5D5838AF970

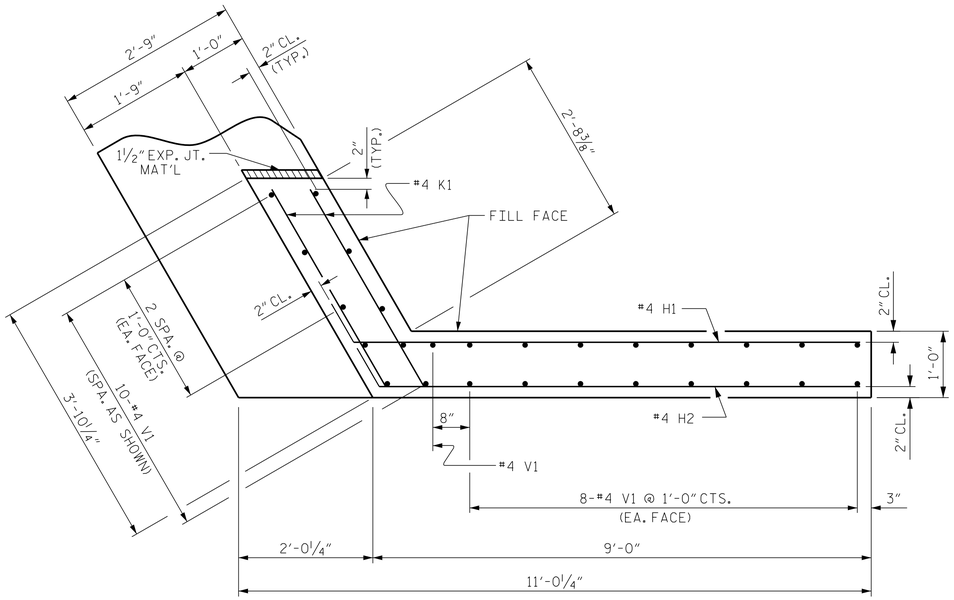

PLAN OF WING (W1)

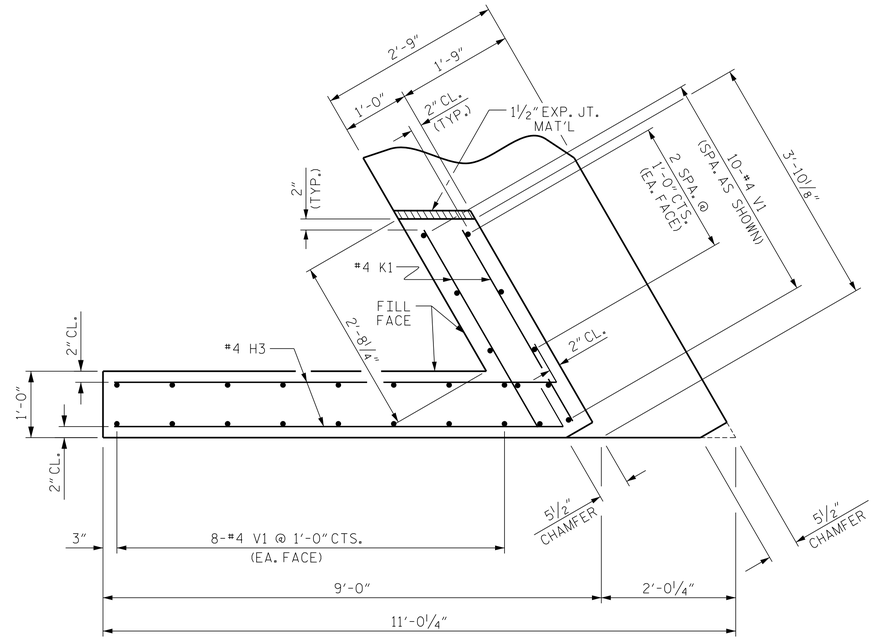

PLAN OF WING (W2)

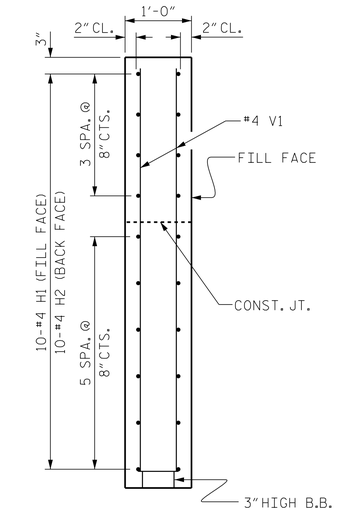

SECTION X-X

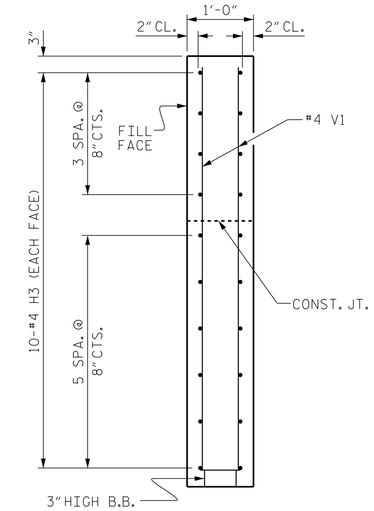

SECTION Y-Y

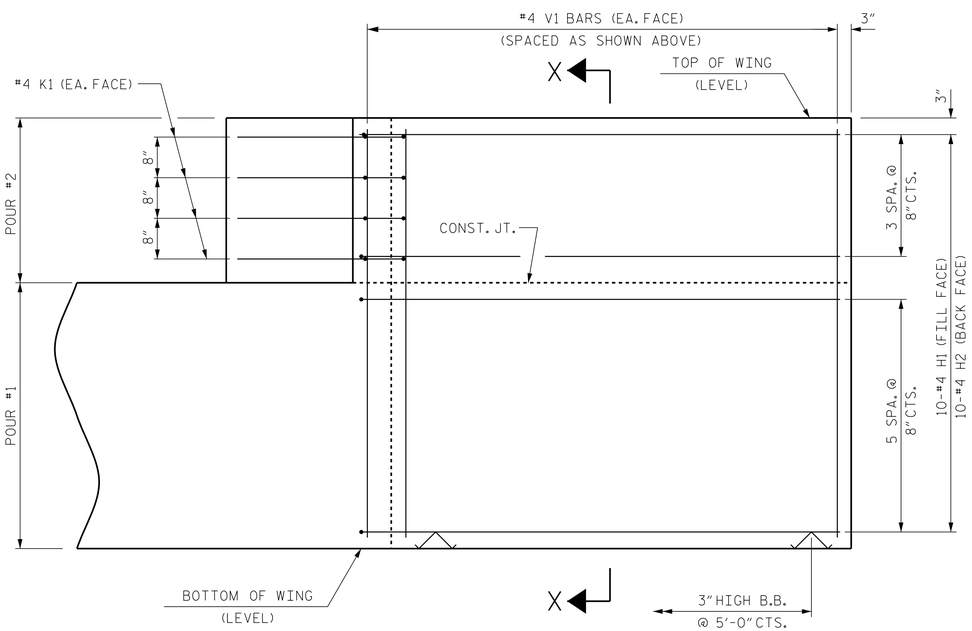

ELEVATION OF WING (W1)

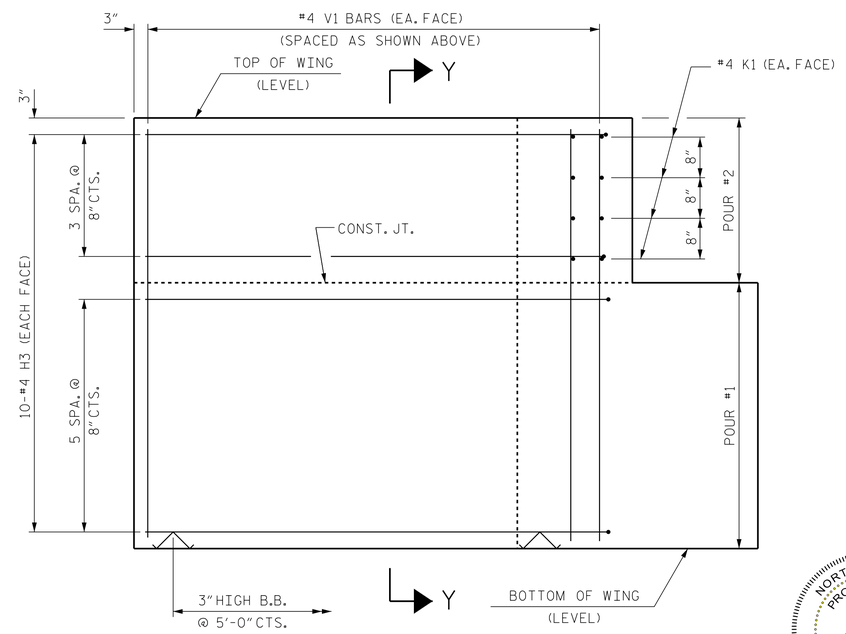

ELEVATION OF WING (W2)

WING DETAILS

DOCUMENT NOT CONSIDERED FINAL UNLESS ALL SIGNATURES COMPLETED

PROJECT NO. 17BP.9.R.25

DAVIE COUNTY

STATION: 12+32.00 -L-

NORTH CAROLINA PROFESSIONAL SEAL 030046 ENGINEER MATTHEW PAYNE

DocuSigned by: 3/30/2016

STATE OF NORTH CAROLINA
DEPARTMENT OF TRANSPORTATION
RALEIGH

SUBSTRUCTURE
END BENT
WING DETAILS

ASSEMBLED BY : C. BLAKES DATE : 11/2012
CHECKED BY : M. PAYNE DATE : 03/2016
DRAWN BY : WJH 12/11
CHECKED BY : AAC 12/11
REV. 4/15 MAA/TMG

ATKINS 1616 E. MILLBROOK ROAD, SUITE #310 RALEIGH, NORTH CAROLINA 27609 (919) 876-6888 NCBEES #F-0326

REVISIONS						
NO.	BY:	DATE:	NO.	BY:	DATE:	
1			3			
2			4			

SHEET NO. S-10
TOTAL SHEETS 13

STD. NO. EB_30_60S4