DocuSign Envelope ID: 63B99F10-5B56-439E-BCE5-B5D5838AF970

PROJECT REFERENCE NO.	SHEET NO.
17BP.9.R.25	2A-1
ROADWAY DESIGN ENGINEER	PAVEMENT DESIGN ENGINEER

NORTH CAROLINA PROFESSIONAL SEAL 024929 ENGINEER CLINTON J. HORGAN

DocuSigned by: Clinton J. Horgan 5/31/2016

DOCUMENT NOT CONSIDERED FINAL UNLESS ALL SIGNATURES COMPLETED

PAVEMENT SCHEDULE

C1	PROP. APPROX. 1.5″ ASPHALT CONCRETE SURFACE COURSE, TYPE S9.5B, AT AN AVERAGE RATE OF 168 LBS. PER SQ. YD.
C2	PROP. APPROX. 3″ ASPHALT CONCRETE SURFACE COURSE, TYPE S9.5B, AT AN AVERAGE RATE OF 168 LBS. PER SQ. YD. IN EACH OF TWO 1.5″ LAYERS.
C3	PROP. VAR. DEPTH ASPHALT CONCRETE SURFACE COURSE, TYPE S9.5B, AT AN AVERAGE RATE OF 112 LBS. PER SQ. YD. PER 1″ DEPTH, TO BE PLACED IN LAYERS NOT TO EXCEED 2″ IN DEPTH.
D1	PROP. APPROX. 2.5″ ASPHALT CONCRETE INTERMEDIATE COURSE, TYPE I19.0B, AT AN AVERAGE RATE OF 285 LBS. PER SQ. YD.
D2	PROP. VAR. DEPTH ASPHALT CONCRETE INTERMEDIATE COURSE,TYPE I19.0B AT AN AVERAGE RATE OF 114 LBS. PER SQ.YD. PER 1″ DEPTH, TO BE PLACED IN LAYERS NOT LESS THAN 2.5″ OR GREATER THAN 4″ DEPTH.
E1	PROP. APPROX. 4″ ASPHALT CONCRETE BASE COURSE, TYPE B25.0B, AT AN AVERAGE RATE OF 456 LBS. PER SQ. YD.
E2	PROP. VAR. DEPTH ASPHALT CONCRETE BASE COURSE, TYPE B25.0B, AT AN AVERAGE RATE OF 114 LBS. PER SQ. YD. PER 1″ DEPTH, TO BE PLACED IN LAYERS NOT LESS THAN 4″ IN DEPTH OR GREATER THAN 5.5″ IN DEPTH.
R1	SHOULDER BERM GUTTER
T	EARTH MATERIAL
U	EXISTING PAVEMENT
W	VARIABLE DEPTH ASPHALT PAVEMENT (SEE WEDGING DETAIL)
J	PROP. 6″ AGGREGATE BASE COURSE.

NOTE: PAVEMENT EDGE SLOPES ARE 1:1 UNLESS SHOWN OTHERWISE.

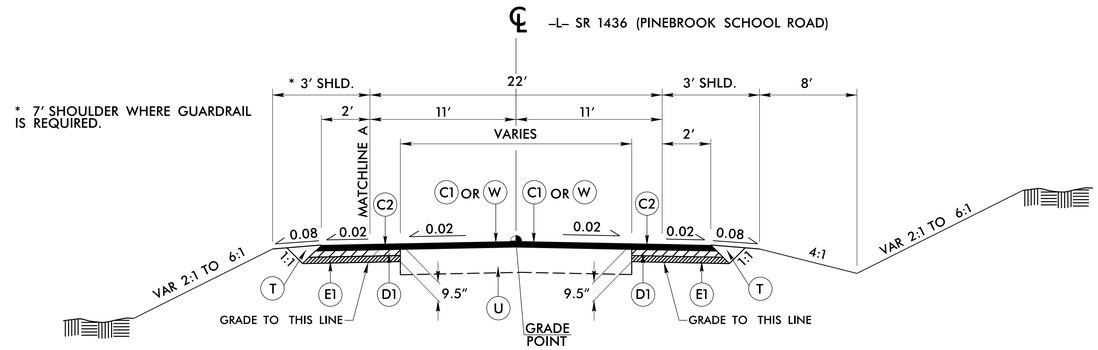

* 7′ SHOULDER WHERE GUARDRAIL IS REQUIRED.

TYPICAL SECTION NO. 1

USE TYPICAL SECTION NO. 1 AS FOLLOWS:
–L– STA. 10+25.00 TO STA. 11+25.00
–L– STA. 13+25.00 TO STA. 14+25.19

NOTE:
TRANSITION FROM EXISTING TO T.S. NO. 1
–L– STA. 10+00.00 TO –L– STA. 10+25.00
–L– STA. 14+25.19 TO –L– STA. 14+50.19

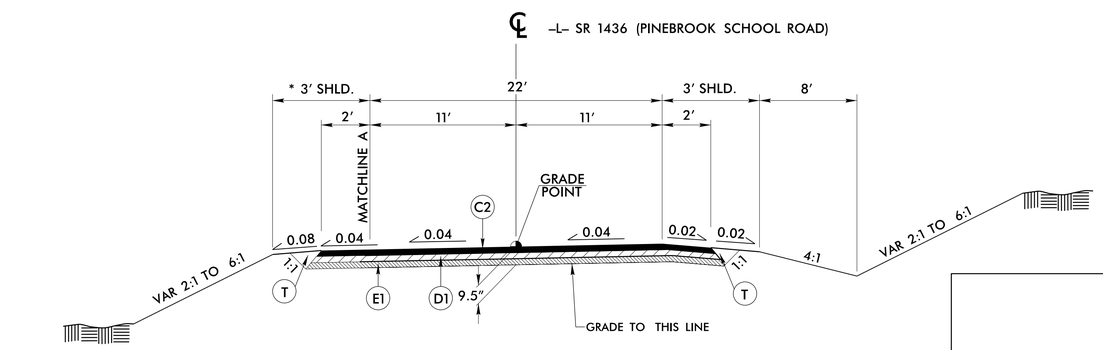

* 7′ SHOULDER WHERE GUARDRAIL IS REQUIRED.

TYPICAL SECTION NO. 2

USE TYPICAL SECTION NO. 2 AS FOLLOWS:
–L– STA. 11+25.00 TO STA. 11+95.70 (BEGIN BRIDGE)
–L– STA. 12+68.28 (END BRIDGE) TO STA. 13+25.00

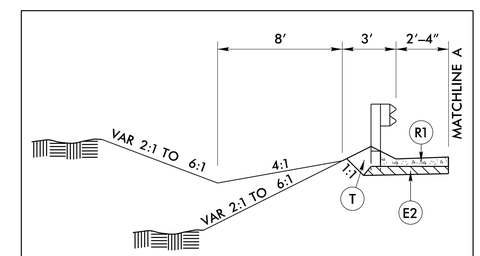

INSET 1

USE TYPICAL WITH SECTION NO. 1 & NO. 2
–L– STA. 10+61.00 TO STA. 11+76.00
–L– STA. 12+73.00 TO STA. 13+89.00

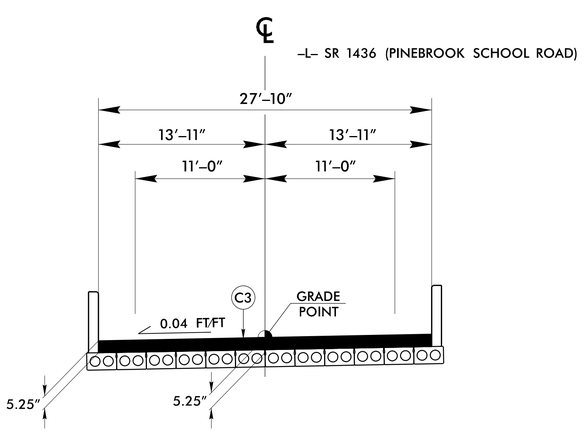

TYPICAL SECTION ON STRUCTURE

–L– STA. 11+95.70 TO STA. 12+68.28

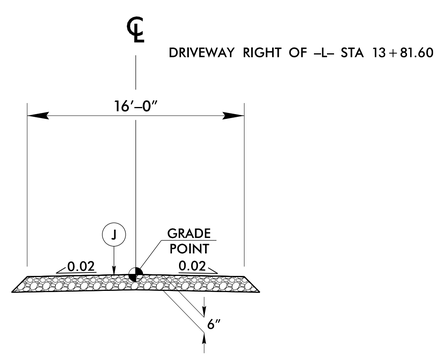

TYPICAL SECTION FOR DRIVEWAY

DRIVEWAY RIGHT OF –L– STA. 13+81.60

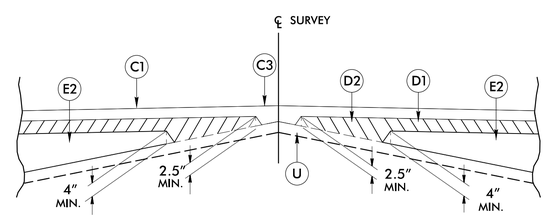

Detail Showing Method of Wedging

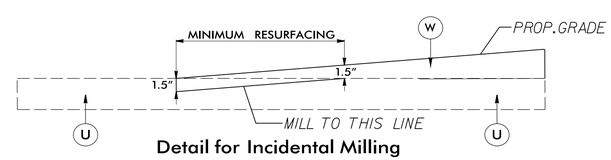

Detail for Incidental Milling

REVISIONS

6/2/99

23-MAR-2016 0:24
R:\Roadway\Proj\29083_Rdy_typ.dgn
$$$$USERNAME$$$$