DocuSign Envelope ID: 63B99F10-5B56-439E-BCE5-B5D5838AF970

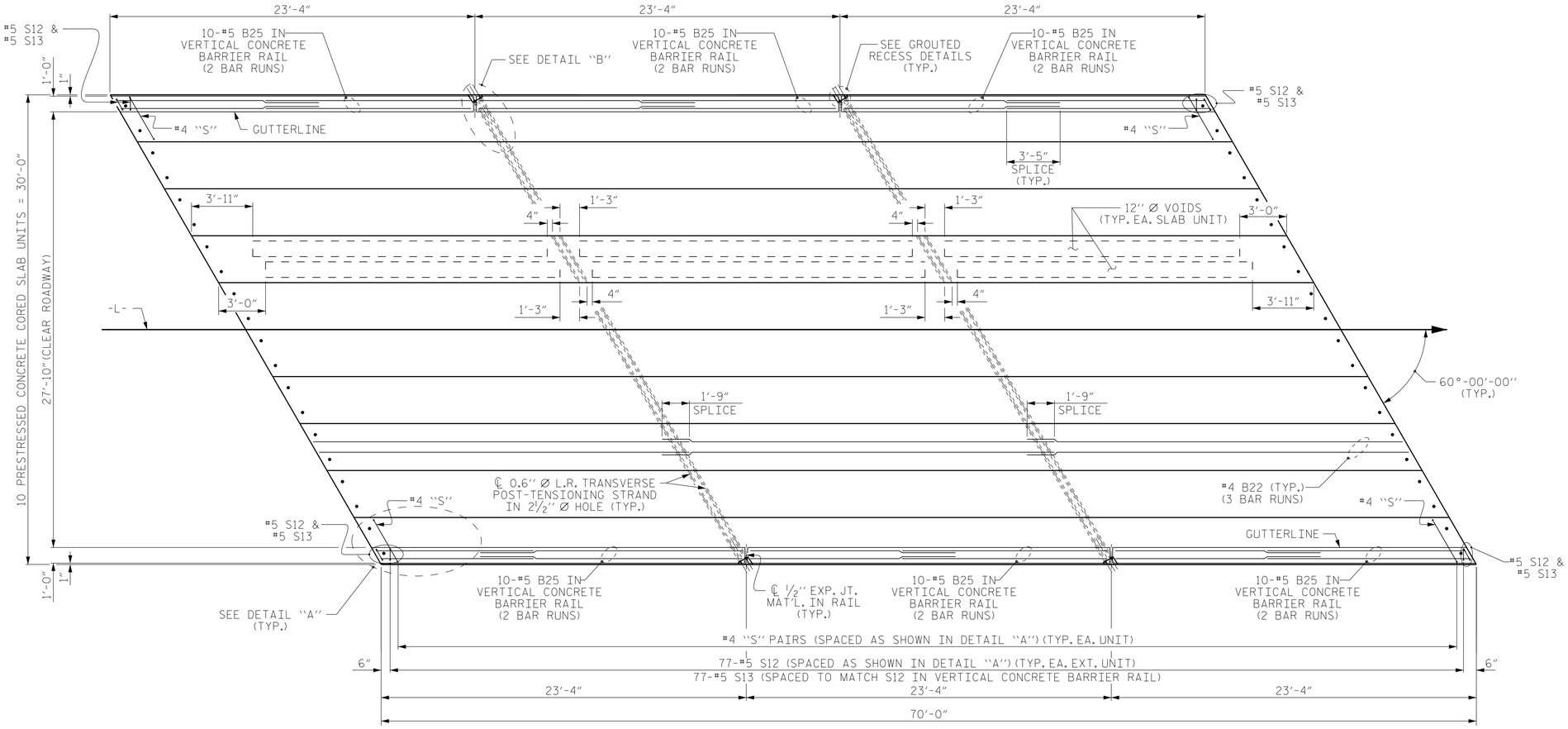

PLAN OF UNIT

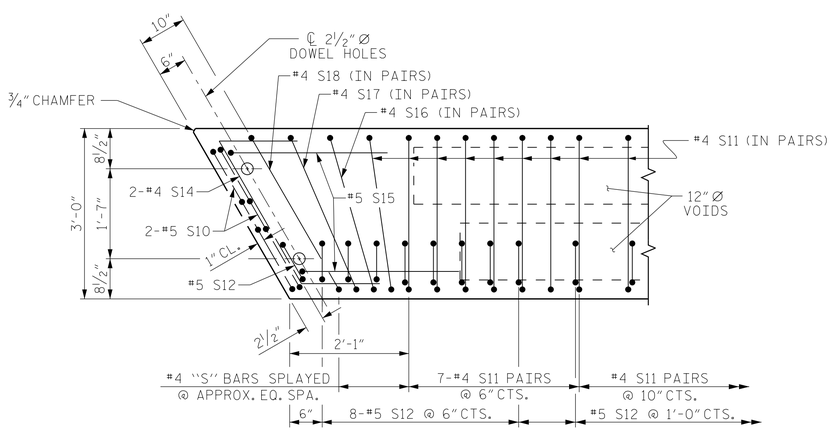

DETAIL "A"

(SIMILAR EACH END OF UNIT)
NOTE: EXTERIOR UNIT SHOWN - INTERIOR UNIT SIMILAR EXCEPT OMIT #5 S12 BARS.

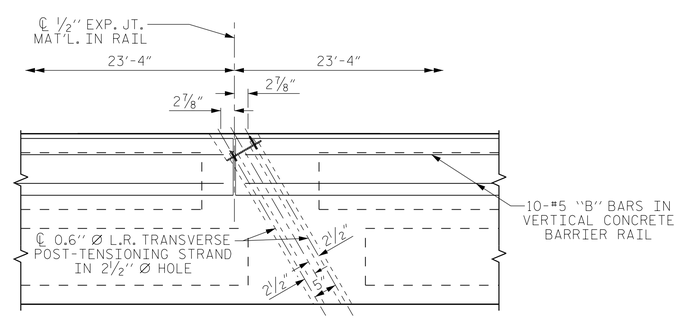

DETAIL "B"

#4 S11 BARS MAY BE SHIFTED AS NECESSARY TO MAINTAIN 1" CLEAR TO GROUTED RECESS AND 2½" Ø TRANSVERSE POST-TENSIONING STRAND HOLES

DOCUMENT NOT CONSIDERED FINAL UNLESS ALL SIGNATURES COMPLETED

NORTH CAROLINA PROFESSIONAL SEAL 030046 ENGINEER MATTHEW PAYNE
DocuSigned by: 3/30/2016

PROJECT NO. 17BP.9.R.25
DAVIE COUNTY
STATION: 12+32.00 -L-

SHEET 2 OF 3

STATE OF NORTH CAROLINA
DEPARTMENT OF TRANSPORTATION
RALEIGH

PLAN OF 70' UNIT
27'-10" CLEAR ROADWAY
60° SKEW

ASSEMBLED BY : C. BLAKES	DATE : 11/2012		
CHECKED BY : M. PAYNE	DATE : 03/2016		
DRAWN BY : MAA 6/10	REV. 12/5/11	MAA/AAC	
CHECKED BY : MKT 7/10	REV. 8/14	MAA/TMC	

ATKINS
1616 E. MILLBROOK ROAD, SUITE #310
RALEIGH, NORTH CAROLINA 27609
(919) 876-6888 NCBEES #F-0326

REVISIONS						SHEET NO.
NO.	BY:	DATE:	NO.	BY:	DATE:	S-5
1			3			TOTAL SHEETS
2			4			13

STD. NO. 24PCS_30_60S_70L